ComfortScrim low-voltage wiring diagram

LAMINAHEAT · TECHNICAL DOCUMENTATION · CABLE EQUIVALENTS ON PAGE 3

LH-CS-01

A NNN series transformer circuit

Low voltage 12–48 V

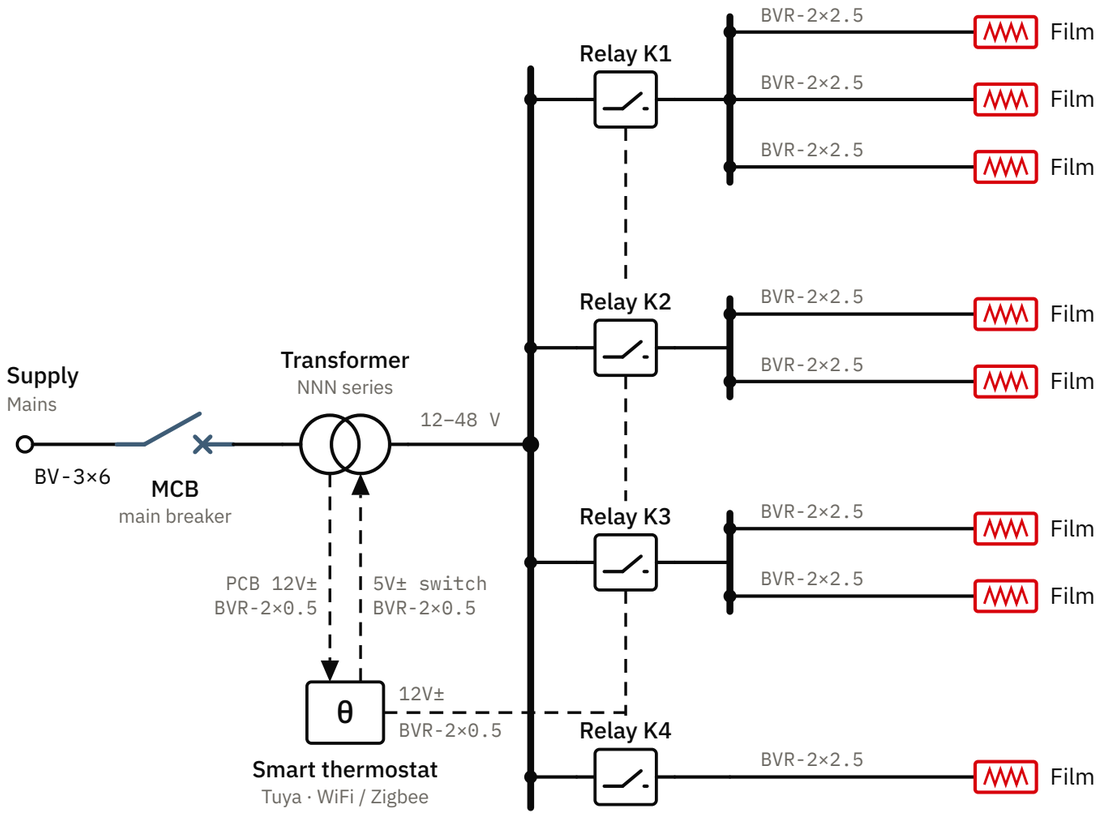

B SLN series transformer circuit

Low voltage 12–48 V

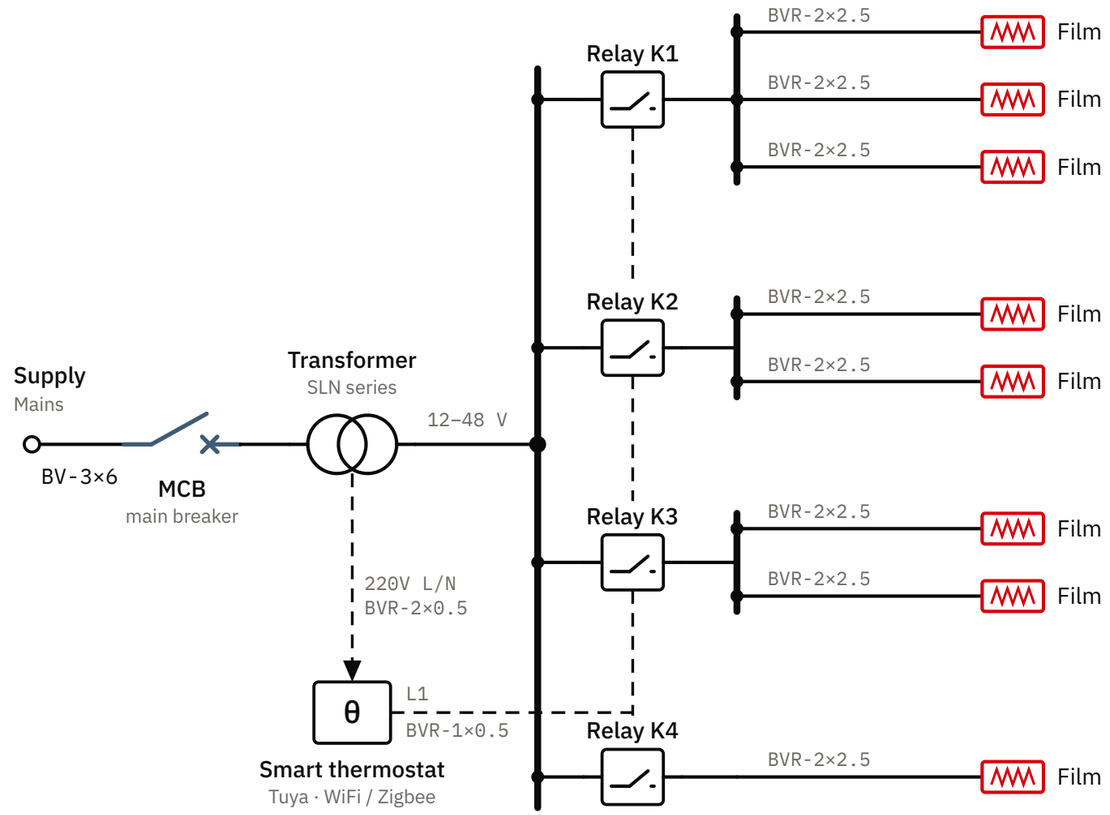

Legend

- Conductor
- Busbar / distribution
- MCB (circuit breaker)
- Transformer (PSU)
- Relay (per circuit)
- Heating film
- Control wire
- θ Smart thermostat

Notes

1. Supply cable BV-3×6 feeds the transformer (power supply) via an MCB.
2. Transformer low-voltage output 12–48 V is distributed to the films via one relay per circuit.
3. Relay to heating film cable: BVR-2×2.5.
4. The thermostat drives the circuit relays via control wires (dashed); terminals on page 2.
5. Number of heating films per relay circuit is illustrative; size per design.
6. Schematic only. Installation must be done by a licensed electrician to local electrical codes.

System	ComfortScrim low voltage
Title	ComfortScrim low-voltage wiring diagram
Drawing no.	LH-CS-01
Rev. / date	A (draft) / 2026-11-06
Scale	Schematic, not to scale
Issued by	LaminaHeat · www.laminaheat.com

A NNN series transformer control

Control wiring

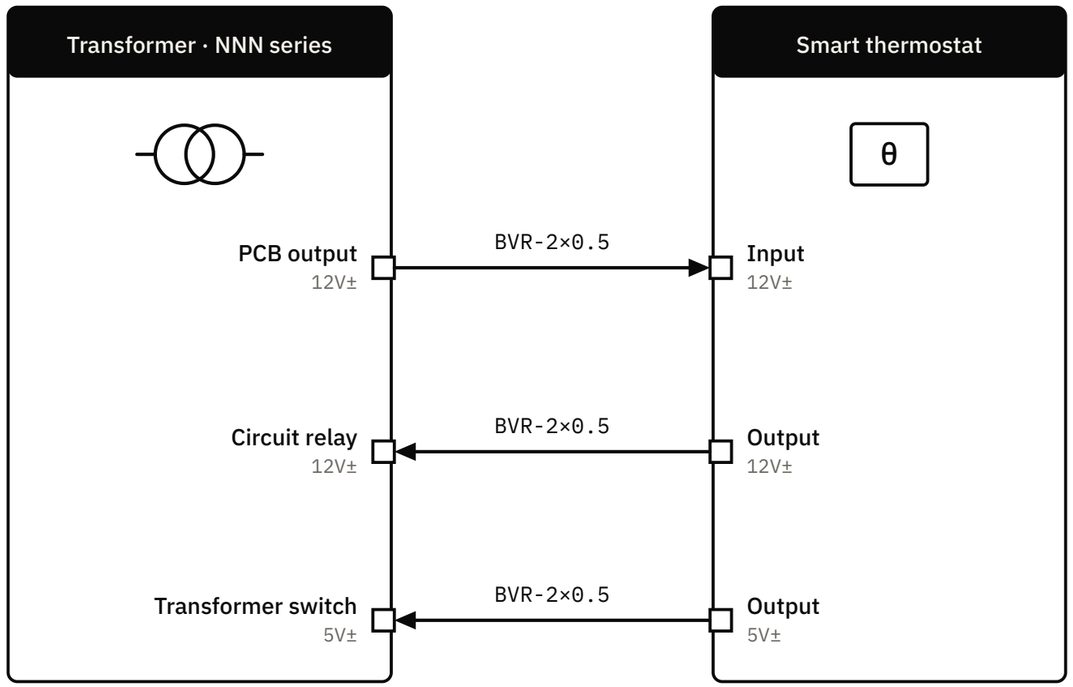

Connection table

Transformer terminal	Cable	Thermostat terminal
PCB output 12V±	BVR-2×0.5 →	Input 12V±
Circuit relay 12V±	BVR-2×0.5 ←	Output 12V±
Transformer switch 5V±	BVR-2×0.5 ←	Output 5V±

Thermostat 12V supply is taken from the transformer PCB.

B SLN series transformer control

Control wiring

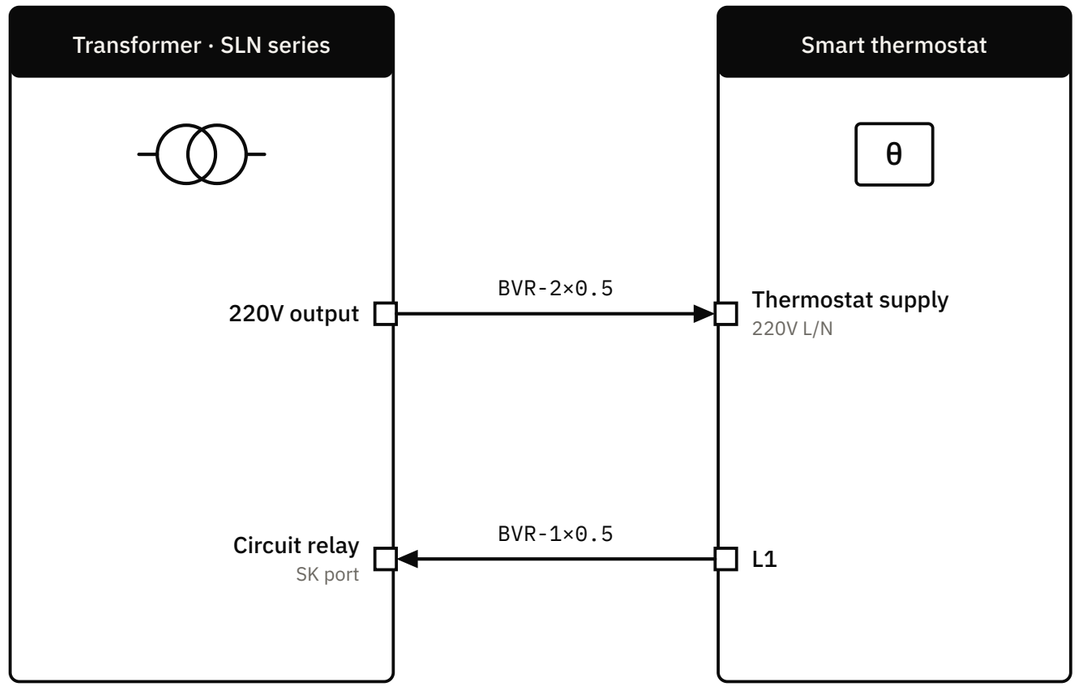

Connection table

Transformer terminal	Cable	Thermostat terminal
220V output	BVR-2×0.5 →	Thermostat supply 220V L/N
Circuit relay SK port	BVR-1×0.5 ←	L1

Thermostat 220V supply is taken from the transformer 220V output.

Legend

- Control wire (arrow = signal / supply direction)
- Transformer (PSU)
- θ Smart thermostat

Notes

1. NNN: thermostat fed by PCB 12V; 12V out → circuit relay; 5V out → transformer switch.
2. SLN: thermostat fed by transformer 220V output (L/N); L1 → circuit relay SK port.
3. Control wires: BVR-2×0.5; SLN series L1 signal wire BVR-1×0.5.
4. Arrows show supply / signal direction.
5. Smart thermostat ships with Tuya pre-installed; compatible with WiFi / Zigbee smart home systems.
6. Schematic only. Installation must be done by a licensed electrician to local electrical codes.

System	**ComfortScrim low voltage**
Title	**ComfortScrim low-voltage control scheme**
Drawing no.	**LH-CS-02**
Rev. / date	**A (draft) / 2026-11-06**
Scale	**Schematic, not to scale**
Issued by	**LaminaHeat · www.laminaheat.com**

C Cable reference · Chinese GB code → IEC / European equivalent

conductor size unchanged

Drawing code (GB/T 5023)	Meaning	IEC 60227 type	European (HAR, EN 50525-2-31)	Used for in this drawing
BV-3×6	3 single cores, solid Cu, PVC, 6 mm², 450/750 V	60227 IEC 01	3 × H07V-U 6 mm² (or H07V-R)	Mains supply to MCB and transformer
BVR-2×2.5	2 single cores, flexible Cu, PVC, 2.5 mm², 450/750 V	60227 IEC 02	2 × H07V-K 2.5 mm²	Relay → heating film (12–48 V)
BVR-2×0.5	2 single cores, flexible Cu, PVC, 0.5 mm²	60227 IEC 06	2 × H05V-K 0.5 mm² (300/500 V)	Transformer ↔ thermostat control / supply
BVR-1×0.5	1 single core, flexible Cu, PVC, 0.5 mm²	60227 IEC 06	1 × H05V-K 0.5 mm² (300/500 V)	SLN series: thermostat L1 → relay SK port

- How to read the GB code: BV = solid copper, PVC insulated; BVR = flexible (stranded) copper, PVC insulated.
- “3×1.5” = three separate single-core wires of 1.5 mm² each (L + N + PE), normally pulled in conduit.
- H07V = 450/750 V, H05V = 300/500 V; -U = solid, -R = stranded, -K = flexible. H07V is not made below 1.5 mm², so 0.5–1.0 mm² control wires map to H05V.
- Where sheathed cable is used instead of single cores in conduit, choose the local equivalent of the same cross-section (e.g. NYM-J 3×1.5 in Germany).
- Equivalents match conductor size, material and insulation class. Final cable selection is the installer’s responsibility under local code (IEC 60364 / national rules).

Cable equivalents

for EU / international installers

Notes

1. Cross-reference only; drawings on pages 1–2 keep the original GB cable codes.
2. Conductor cross-sections are taken unchanged from the original drawings.
3. Schematic only. Installation must be done by a licensed electrician to local electrical codes.

System	ComfortScrim low voltage
Title	Cable reference
Drawing no.	LH-CS-03
Rev. / date	A (draft) / 2026-11-06
Scale	Schematic, not to scale
Issued by	LaminaHeat · www.laminaheat.com