SafeTech EGS wiring diagram

LAMINAHEAT · TECHNICAL DOCUMENTATION · CABLE EQUIVALENTS ON PAGE 3

LH-EGS-01

A EGS circuit · small load

Single circuit · P<3kW

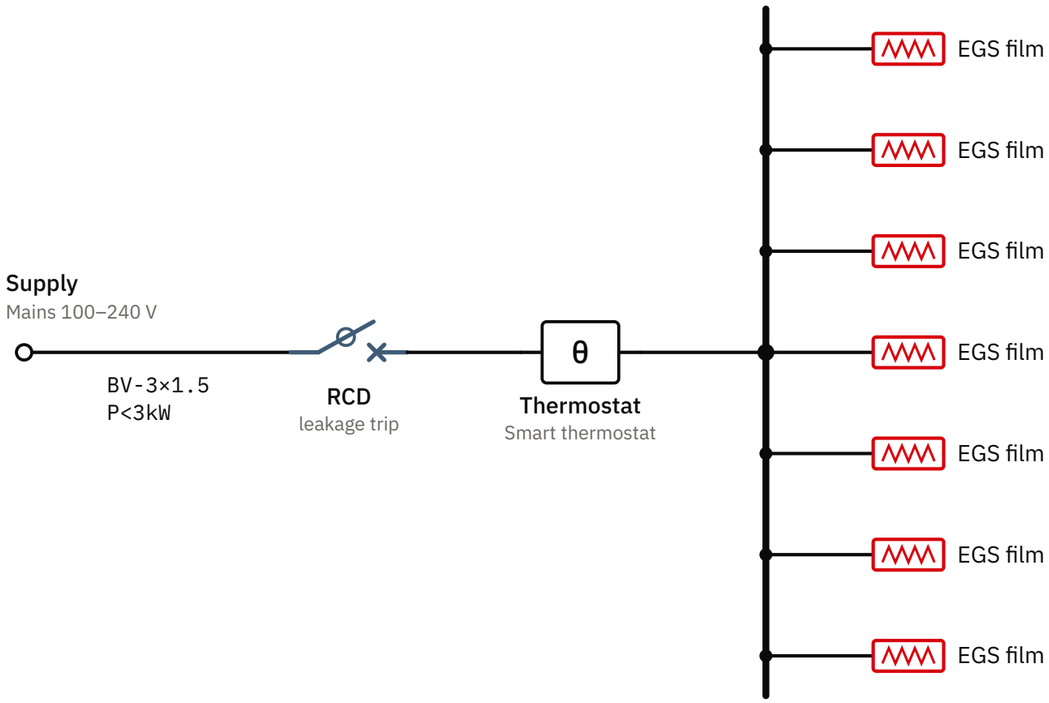

B EGS circuit · large load

Multi-circuit · contactor control

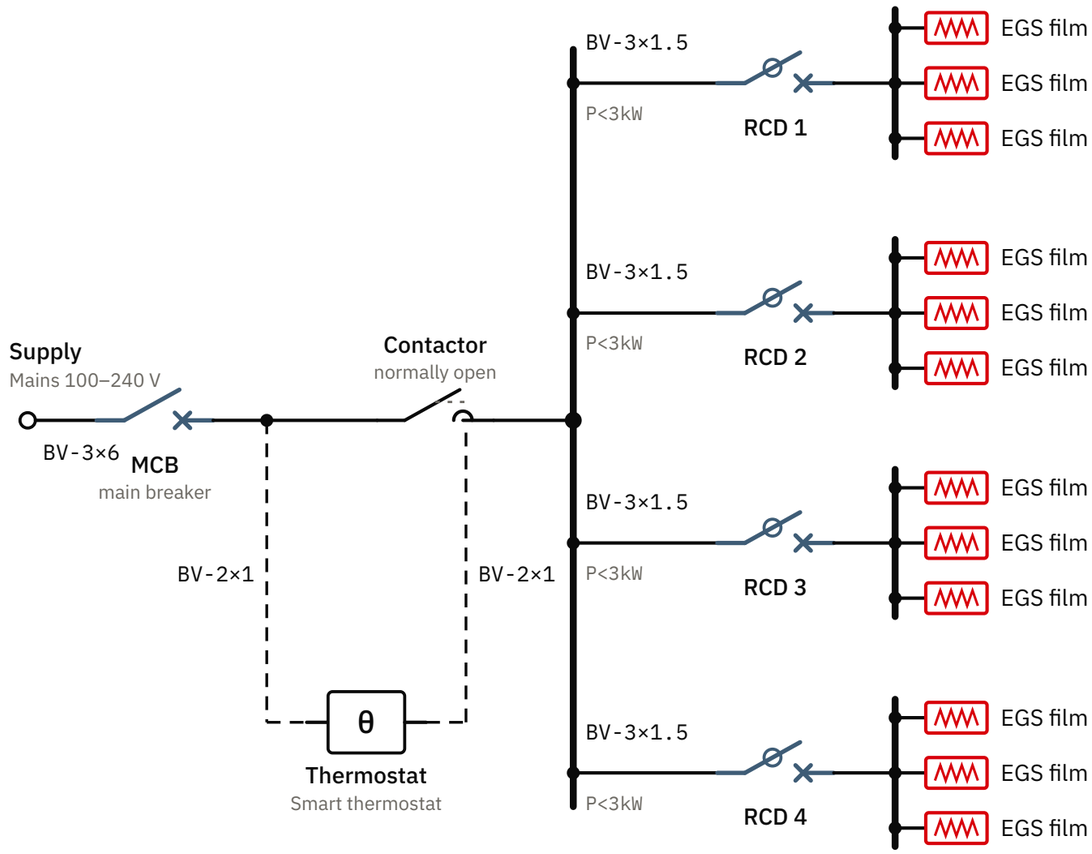

Legend

- Main circuit conductor
- Busbar / distribution
- Control wire
- MCB (circuit breaker)
- RCD (residual current)
- Contactor (NO)
- θ Thermostat
- EGS heating film

Notes

1. Supply: mains 100–240 V.
2. Each heating circuit P<3kW, cable BV-3×1.5, with its own RCD.
3. Large load: main supply BV-3×6 + MCB; thermostat drives a NO contactor via BV-2×1.
4. Number of heating films is illustrative; size to circuit power.
5. Smart thermostat ships with Tuya pre-installed; compatible with WiFi / Zigbee smart home systems.
6. Schematic only. Installation must be done by a licensed electrician to local electrical codes.

System	**SafeTech EGS**
Title	**SafeTech EGS wiring diagram**
Drawing no.	**LH-EGS-01**
Rev. / date	**A (draft) / 2026-11-06**
Scale	**Schematic, not to scale**
Issued by	**LaminaHeat · www.laminaheat.com**

A Small load · direct thermostat control

For one circuit P<3kW

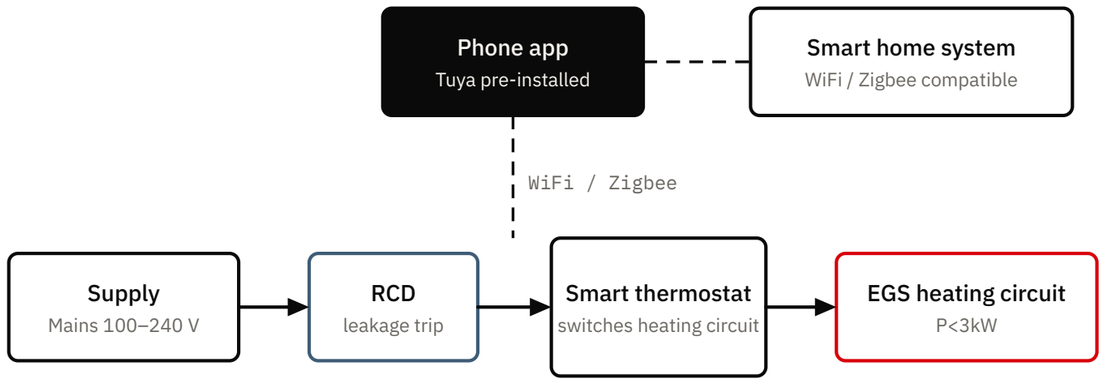

Control logic

① The smart thermostat is wired in series and switches the circuit on / off.

② Room below set temperature → thermostat closes → heating starts.

③ Set temperature reached → thermostat opens → heating stops.

④ Set temperature can be changed on the thermostat or in the phone app.

⑤ Circuit total P<3kW, cable BV-3×1.5, RCD upstream.

When to use

Small area, single room / zone: when total heating load is below 3kW, no contactor is needed. Above 3kW use scheme B.

B Large load · thermostat drives contactor

Multi-circuit, each P<3kW

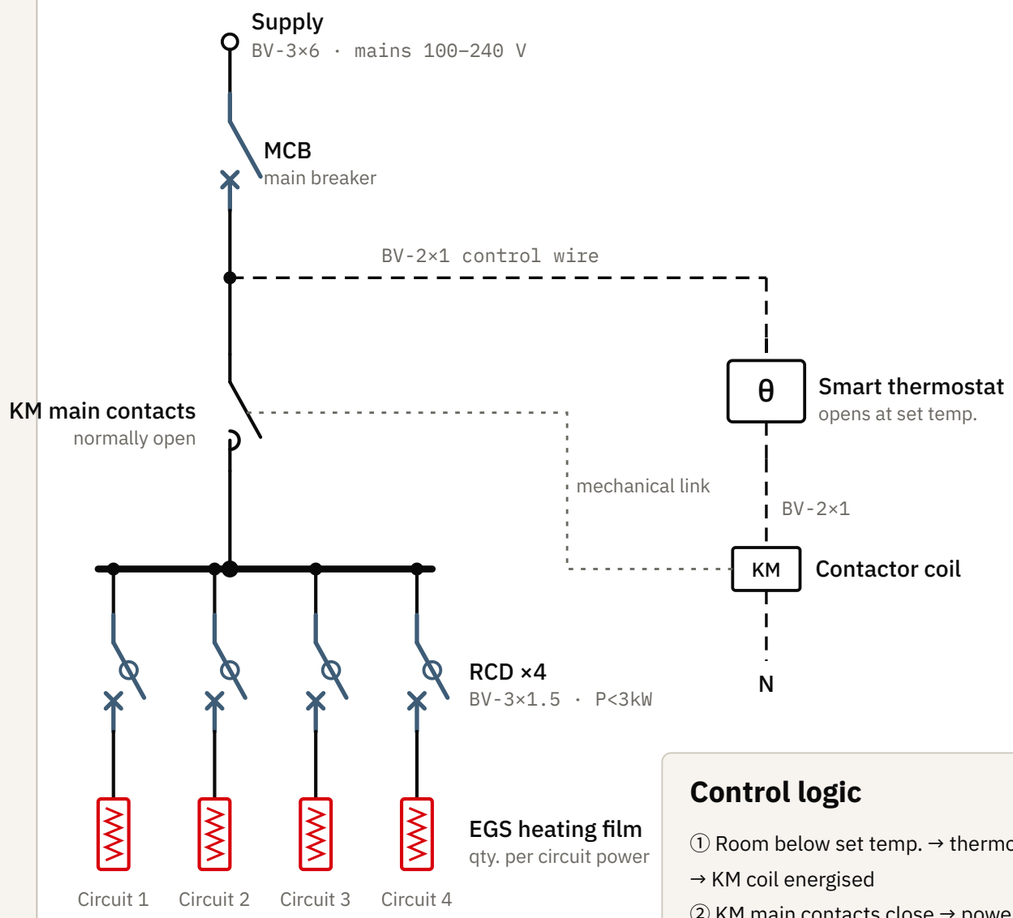

Control logic

① Room below set temp. → thermostat closes → KM coil energised

② KM main contacts close → power to all circuits (via RCD) → heating

③ Set temp. reached → thermostat opens → KM drops out, heating stops

Legend

- Main circuit conductor
- Busbar / distribution
- Control wire
- MCB (circuit breaker)
- RCD (residual current)
- Main contacts (NO)
- KM — Contactor coil KM
- mechanical link

Notes

1. Small load (P<3kW): thermostat switches the heating circuit directly.
2. Large load: thermostat drives the contactor coil; main contacts switch all sub-circuits.
3. After the contactor each sub-circuit P<3kW, cable BV-3×1.5, with its own RCD.
4. Control wire BV-2×1.
5. Smart thermostat ships with Tuya pre-installed; compatible with WiFi / Zigbee smart home systems.
6. Schematic only. Installation must be done by a licensed electrician to local electrical codes.

System	**SafeTech EGS**
Title	**SafeTech EGS control scheme**
Drawing no.	**LH-EGS-02**
Rev. / date	**A (draft) / 2026-11-06**
Scale	**Schematic, not to scale**
Issued by	**LaminaHeat · www.laminaheat.com**

C Cable reference · Chinese GB code → IEC / European equivalent

conductor size unchanged

Drawing code (GB/T 5023)	Meaning	IEC 60227 type	European (HAR, EN 50525-2-31)	Used for in this drawing
BV-3×6	3 single cores, solid Cu, PVC, 6 mm², 450/750 V	60227 IEC 01	3 × H07V-U 6 mm² (or H07V-R)	Main supply, large-load system (to MCB)
BV-3×1.5	3 single cores, solid Cu, PVC, 1.5 mm², 450/750 V	60227 IEC 01	3 × H07V-U 1.5 mm²	Each heating circuit, P<3kW (with RCD)
BV-2×1	2 single cores, solid Cu, PVC, 1.0 mm²	60227 IEC 05	2 × H05V-U 1.0 mm² (300/500 V)	Thermostat ↔ contactor coil control

- How to read the GB code: BV = solid copper, PVC insulated; BVR = flexible (stranded) copper, PVC insulated.
- “3×1.5” = three separate single-core wires of 1.5 mm² each (L + N + PE), normally pulled in conduit.
- H07V = 450/750 V, H05V = 300/500 V; -U = solid, -R = stranded, -K = flexible. H07V is not made below 1.5 mm², so 0.5–1.0 mm² control wires map to H05V.
- Where sheathed cable is used instead of single cores in conduit, choose the local equivalent of the same cross-section (e.g. NYM-J 3×1.5 in Germany).
- Equivalents match conductor size, material and insulation class. Final cable selection is the installer’s responsibility under local code (IEC 60364 / national rules).

Cable equivalents

for EU / international installers

Notes

1. Cross-reference only; drawings on pages 1–2 keep the original GB cable codes.
2. Conductor cross-sections are taken unchanged from the original drawings.
3. Schematic only. Installation must be done by a licensed electrician to local electrical codes.

System	SafeTech EGS
Title	Cable reference
Drawing no.	LH-EGS-03
Rev. / date	A (draft) / 2026-11-06
Scale	Schematic, not to scale
Issued by	LaminaHeat · www.laminaheat.com